Electronics for Power Systems at Low Temperatures

M. J. Hennessy

MTECH Laboratories, LLC

Space Systems for Extreme Environments
NASA /JPL / California Institute of Technology

May 14-16, 2003
Pasadena, California

MTECH Laboratories

Technology Core: MRI

MTECH Labs Mission

MRI Spin-off Technologies

- Custom Cryogenic Electronics
  - Power Electronics
  - Audio through RF
  - Low noise
- HTS Components and Circuitry
- Telecommunications Software
- Advanced Magnet Design
- Spintronics (MRFM)

MTECH Laboratories

Custom R&D

Cryogenic Electronic System Design
Cryogenic Hardware Design
Cryogenic Hardware Fabrication
Cryogenic Testing

MTECH Laboratories

Custom Hardware

Cryo Circuits and Components

- inverters and converters
- synchronous rectifiers
- linear amplifiers

HTS Thin Film Circuits

HTS Bus work

Cryocooled Lasers

Low Noise front ends

MTECH Laboratories

Advanced R&D

- Inhomogeneous field MRI
- RF
- Magnetics
- Dielelectrics
- Fundamental Noise Studies

MTECH Laboratories

Exotica

- Thermoelectrics
- Cryo Robotics
- HyperPolarized Gas
- Spintronics (MRFM)

MTECH Laboratories

Cryo Devices

Cryo-Electronics Components

Passive Devices

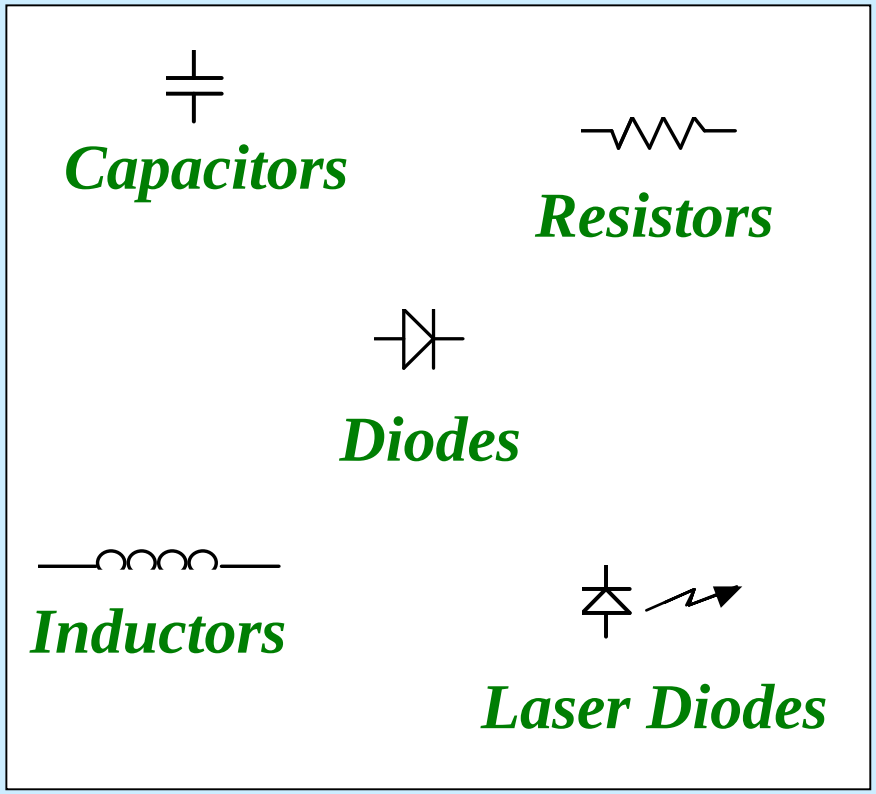

Active Devices

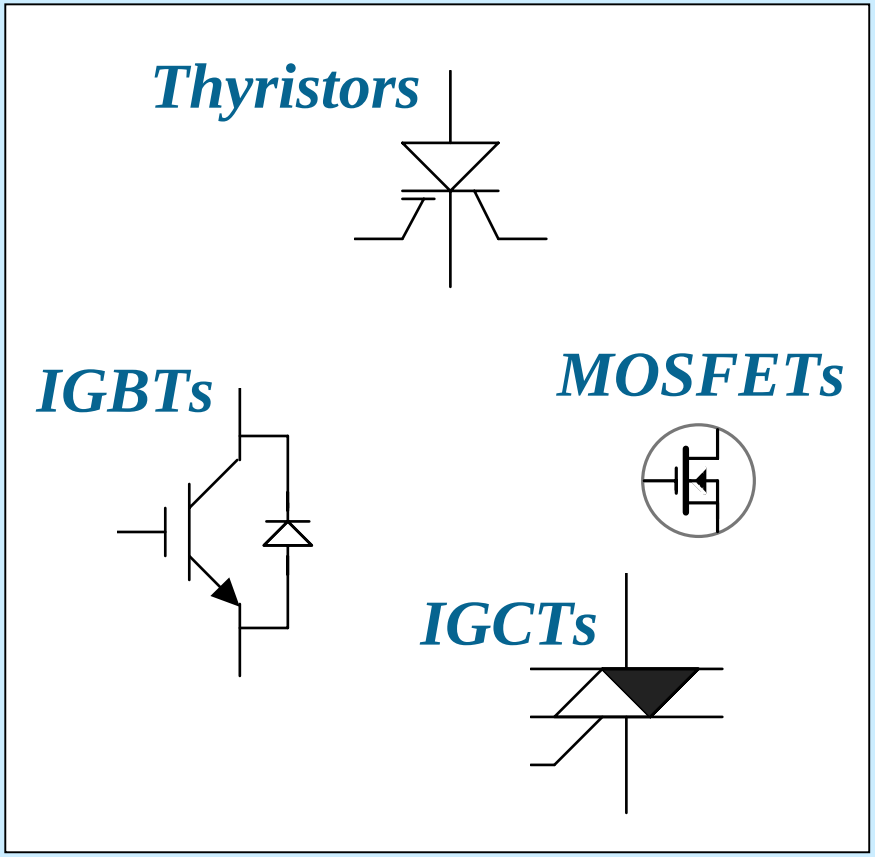

Cryo Reliability

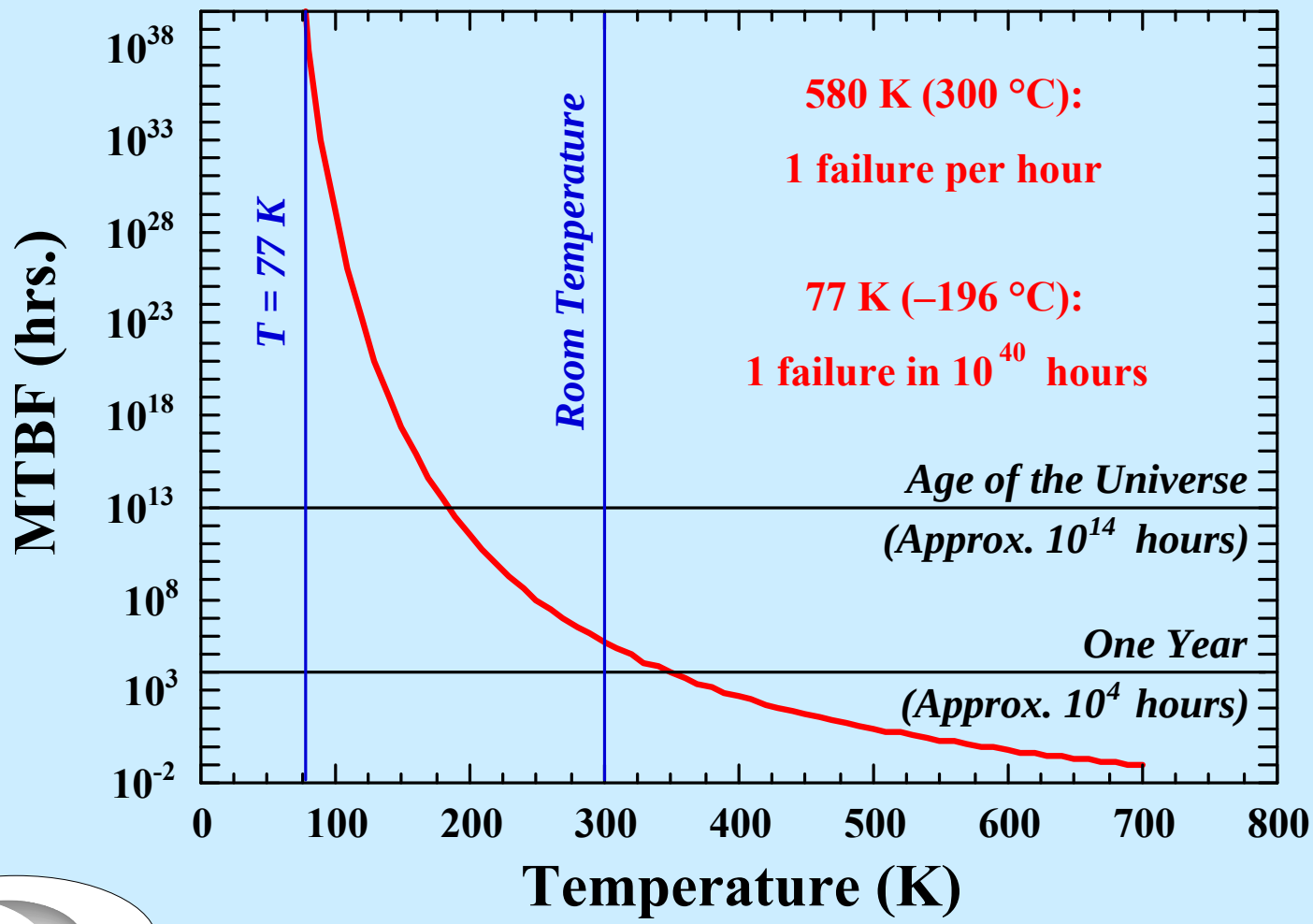

MOSFET On Resistance very low at 77K

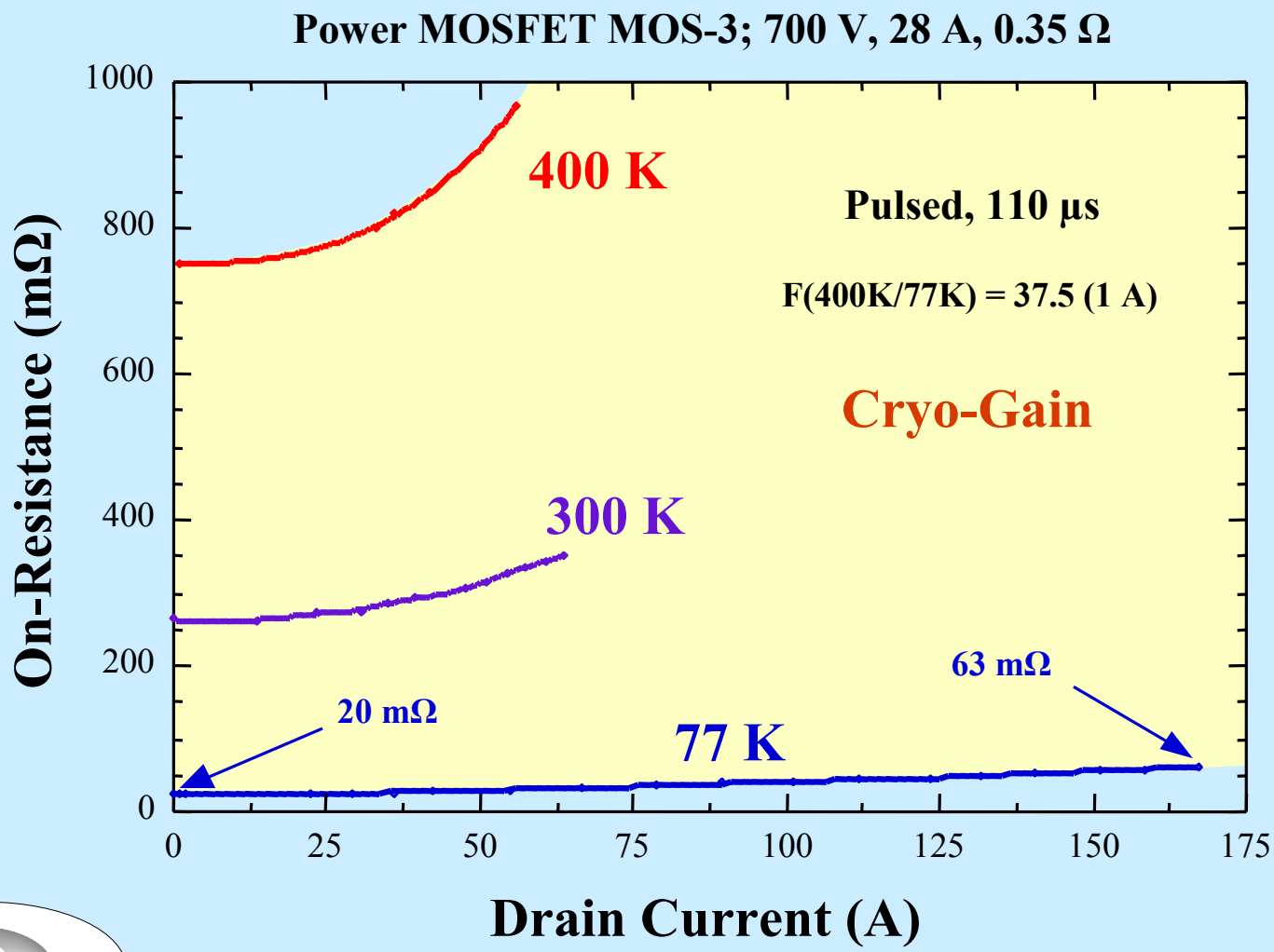

IGBT: Current vs. On-State Voltage (MIG-3: 3.3 kV, 200 A)

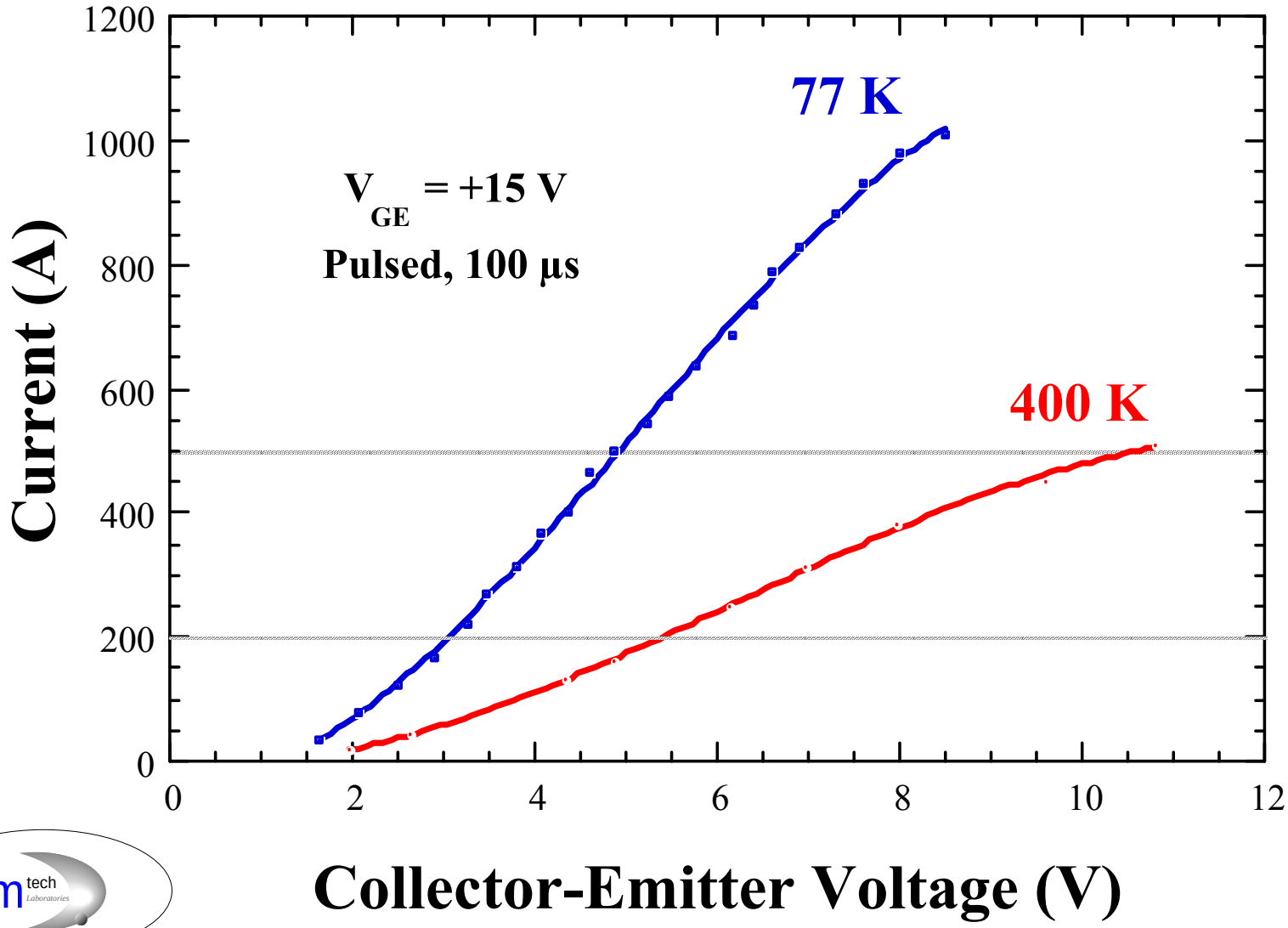

MOSFET R(on) vs. Temperature

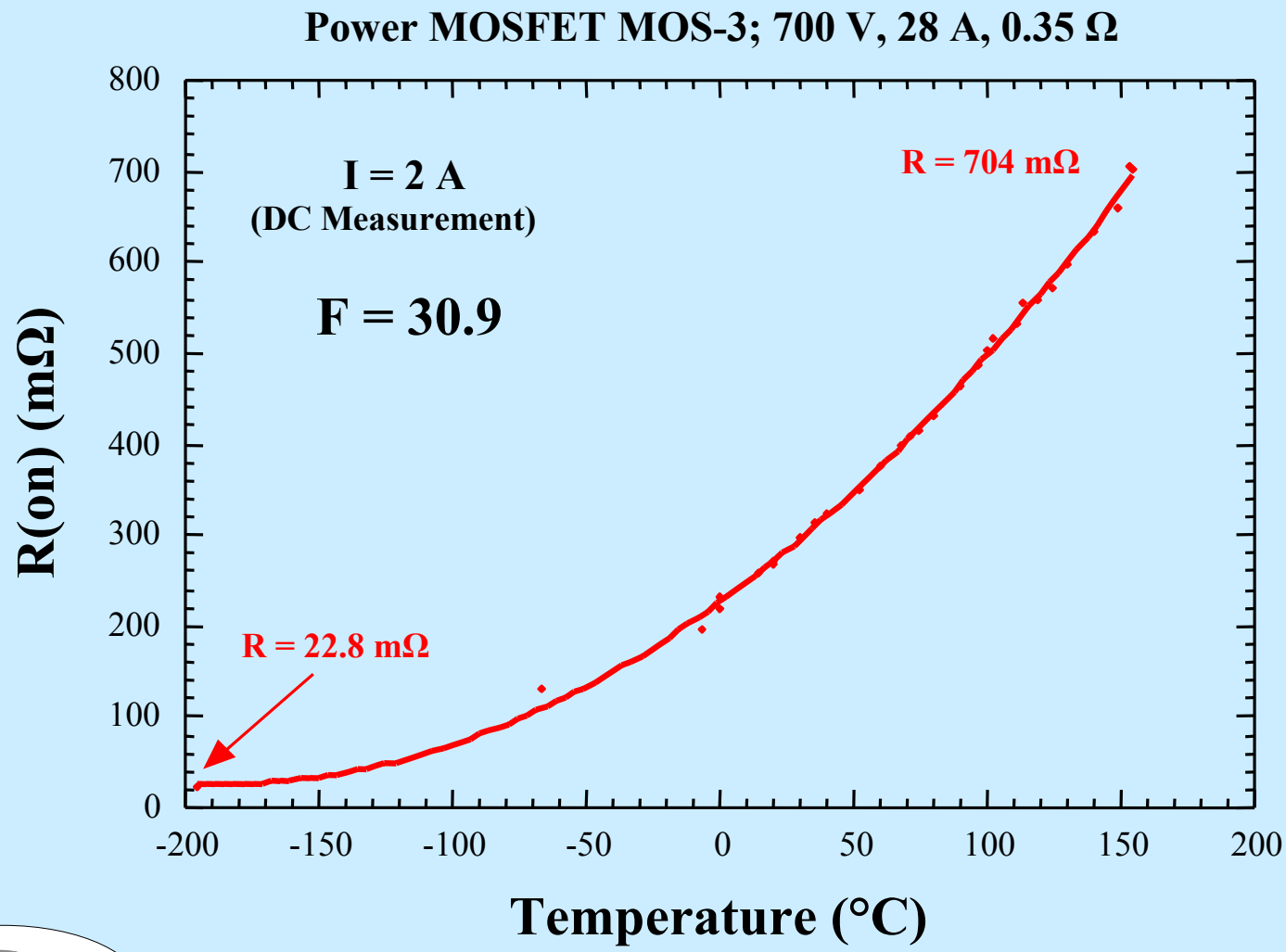

IGBT Turn-On Speeds

IGBT: MIG-08
1400 V
Pulsed, 10 ms

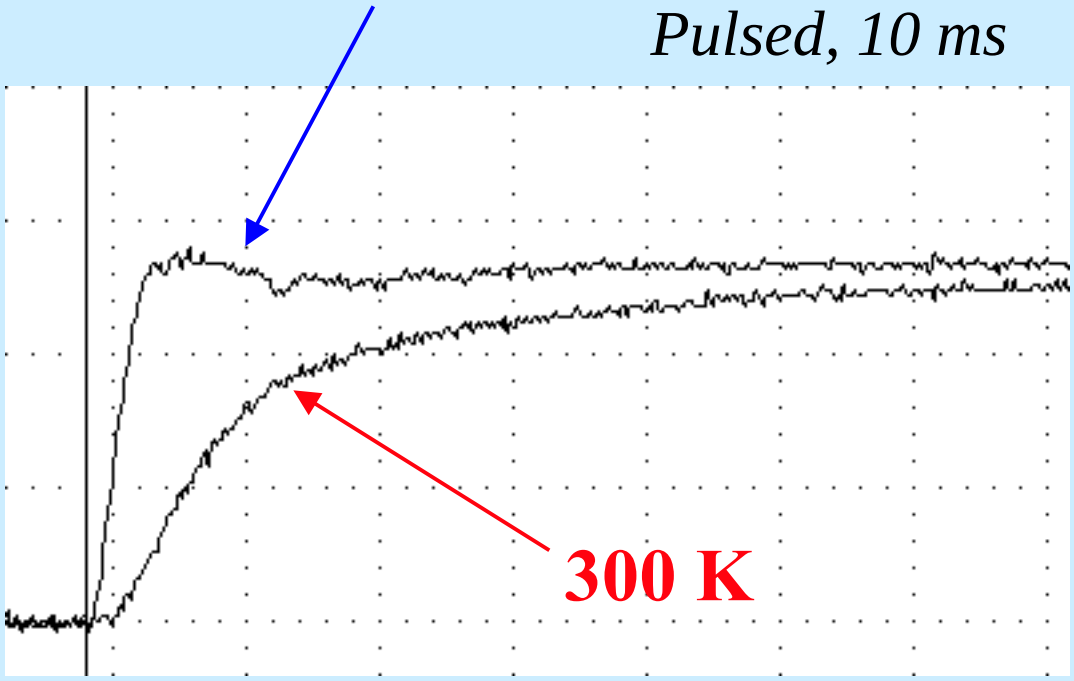

Rise Times:
300 K: 247 ns
77 K: 30 ns

8.3 times improvement

IGBT Turn-Off Time much faster at 77K

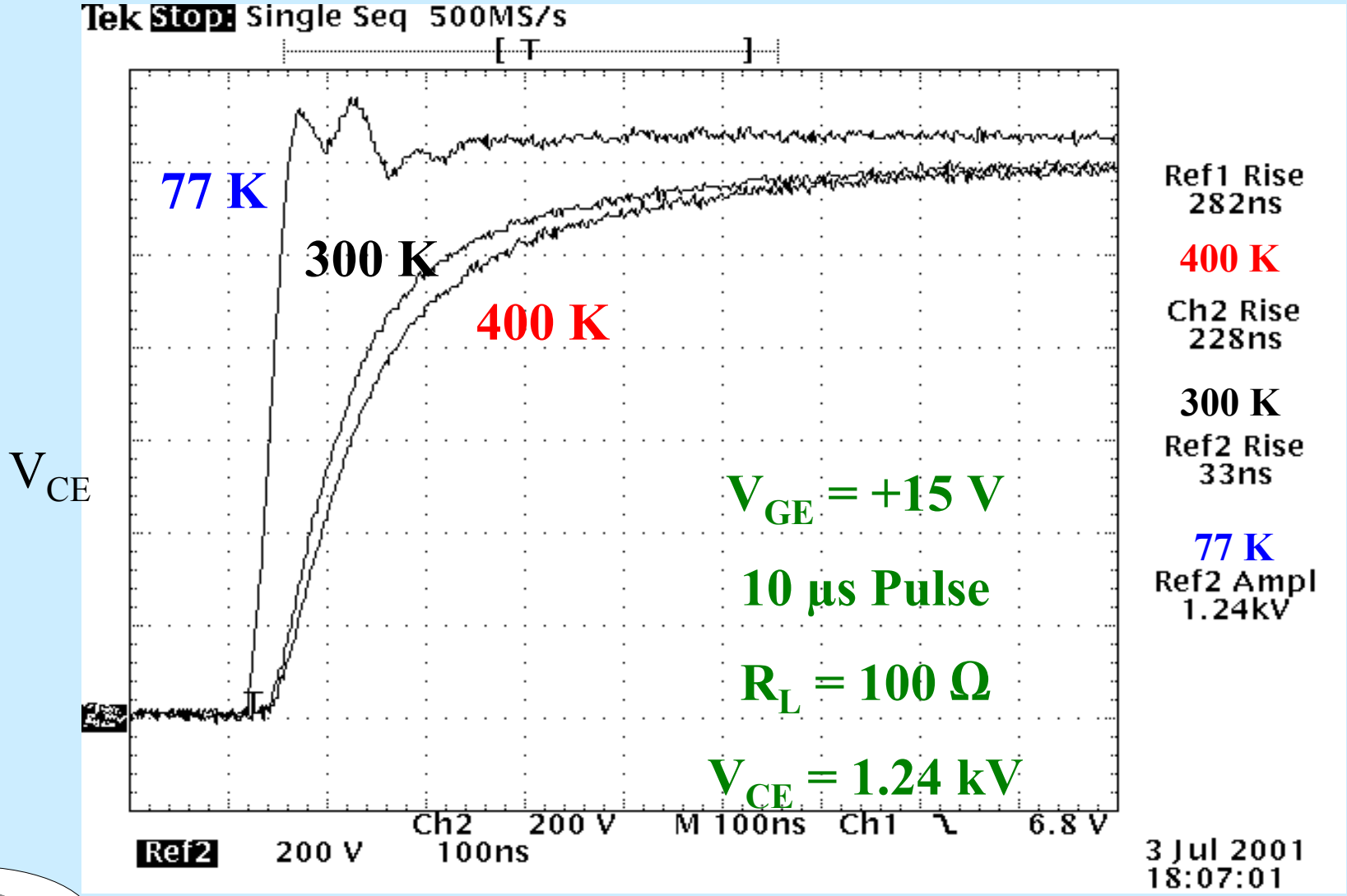

Cryo-Power Applications

Cryo-Power Advantages

- Semiconductor device performance
  - Conduction losses decrease
  - Switching speeds increase
  - Over-current capability increases
- Passive device performance
- Reliability
- Superconducting power interconnects
- Reduction in size / weight / power loss

Synchronous Rectifier

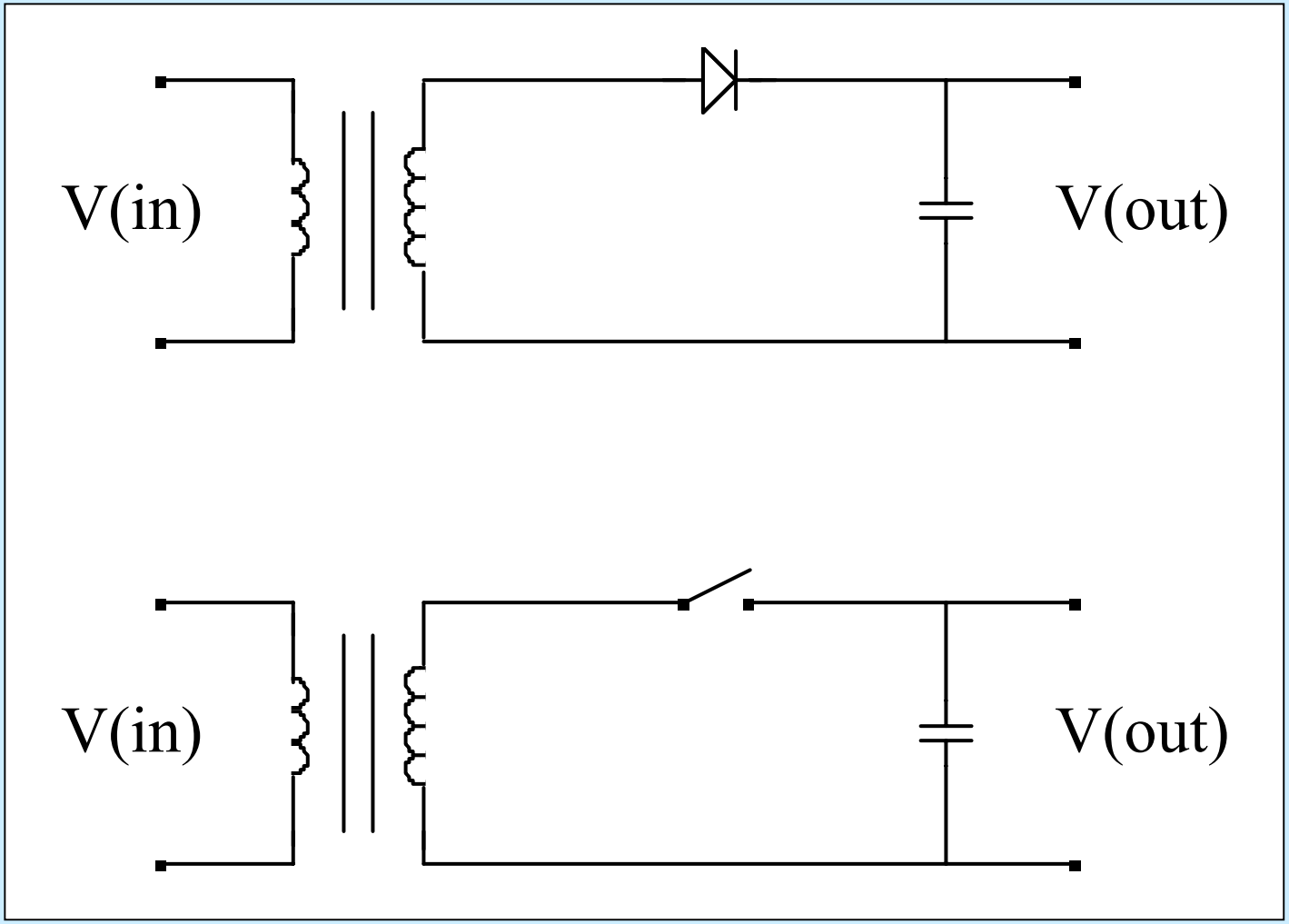

Buck Converter

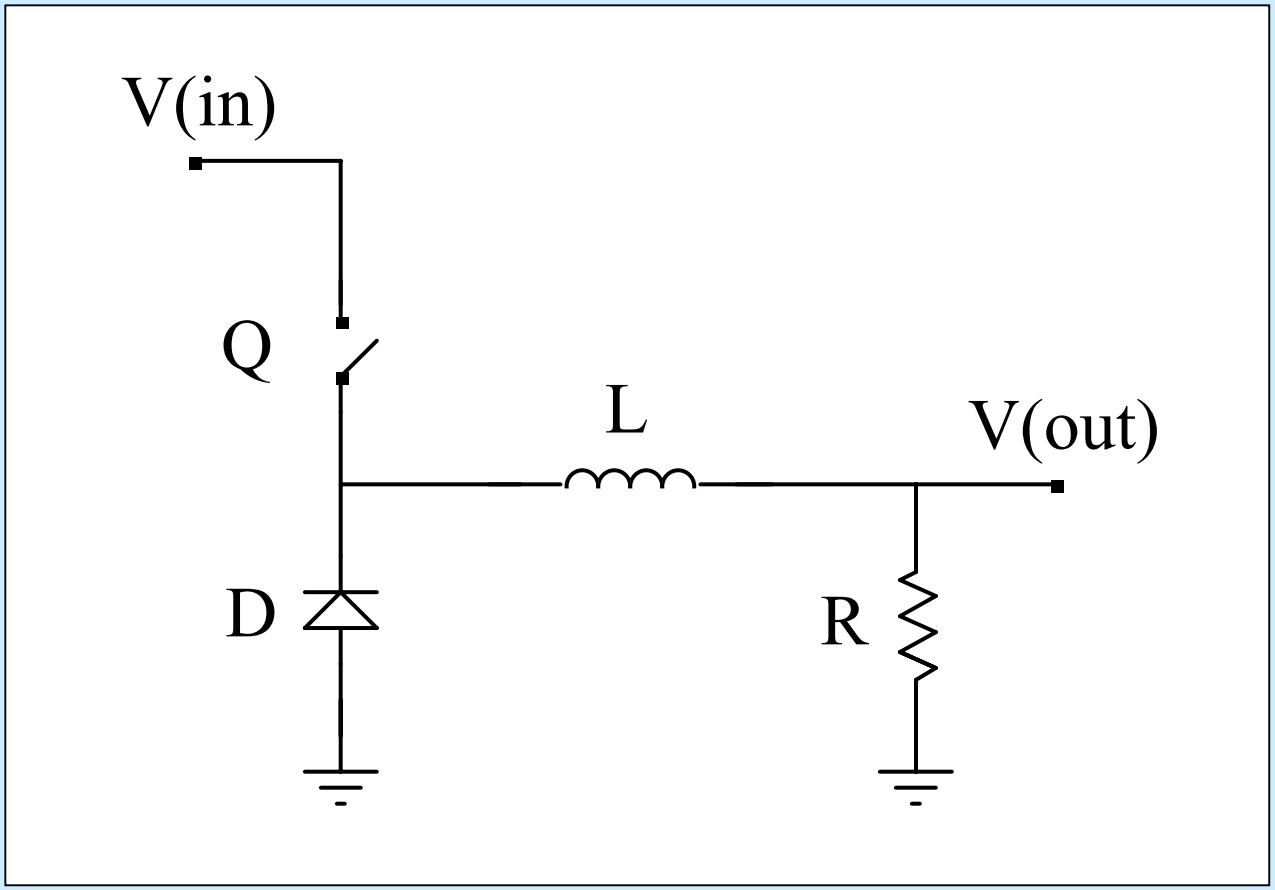

Half-Bridge

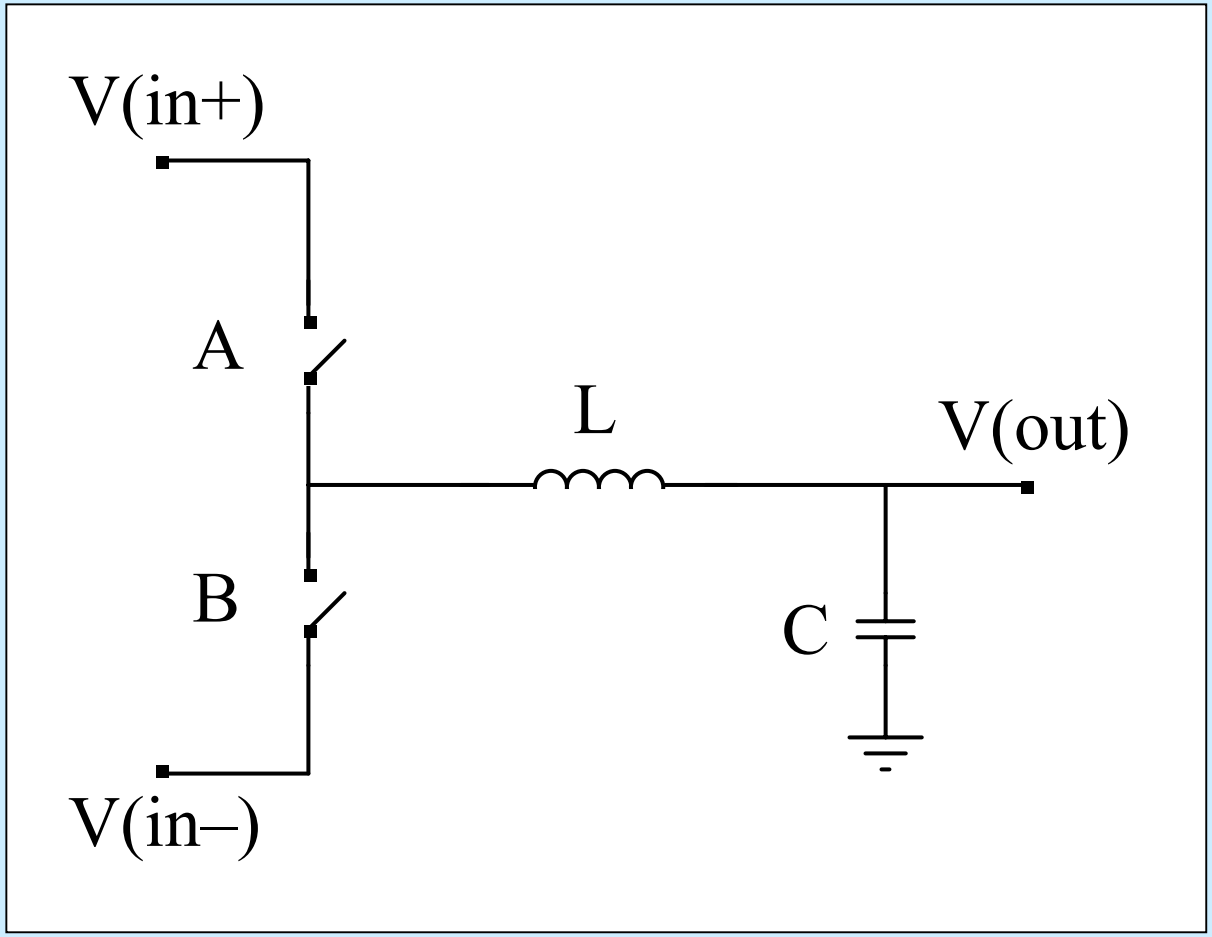

Full-Bridge

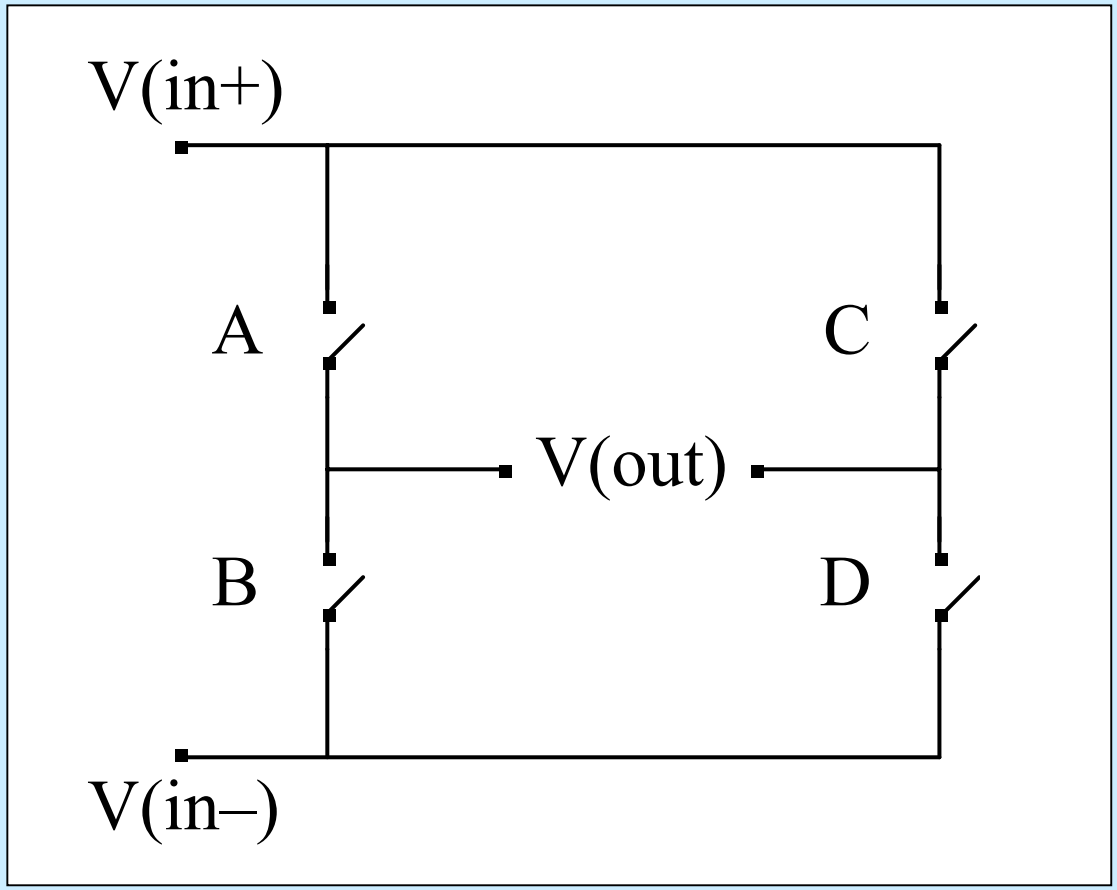

RF Power Transmitter
Efficiency versus Temperature

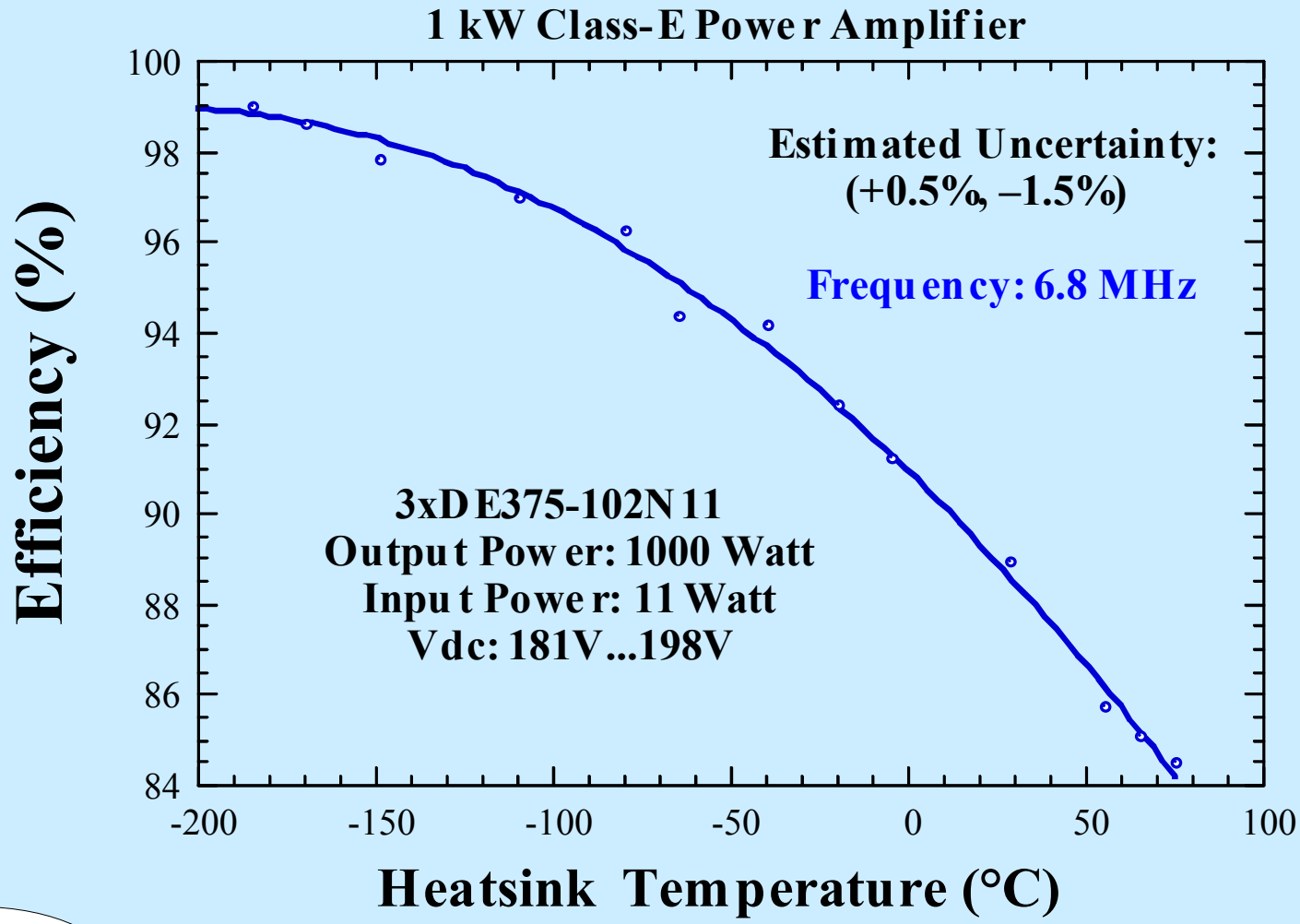

MOSFET Modules are stacked vertically in racks…

…and module interconnects are added.

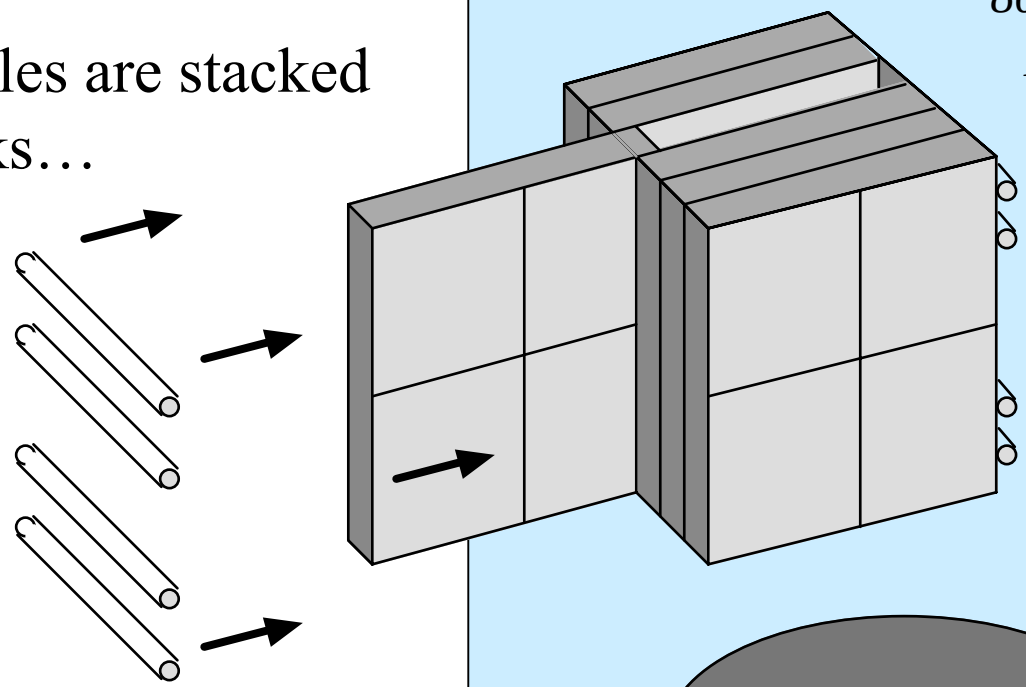

800 V, 500 A MOSFET Modules

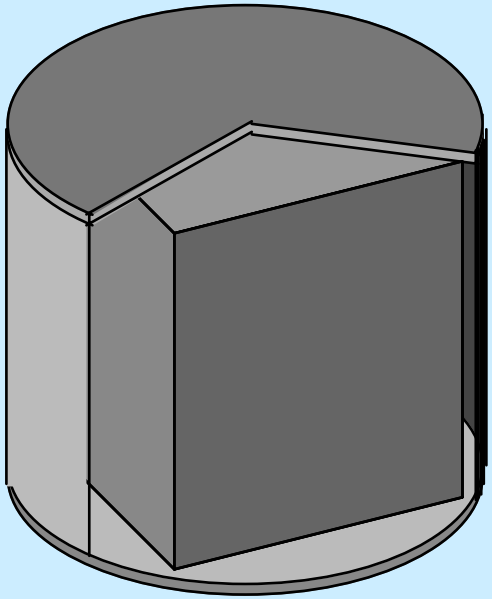

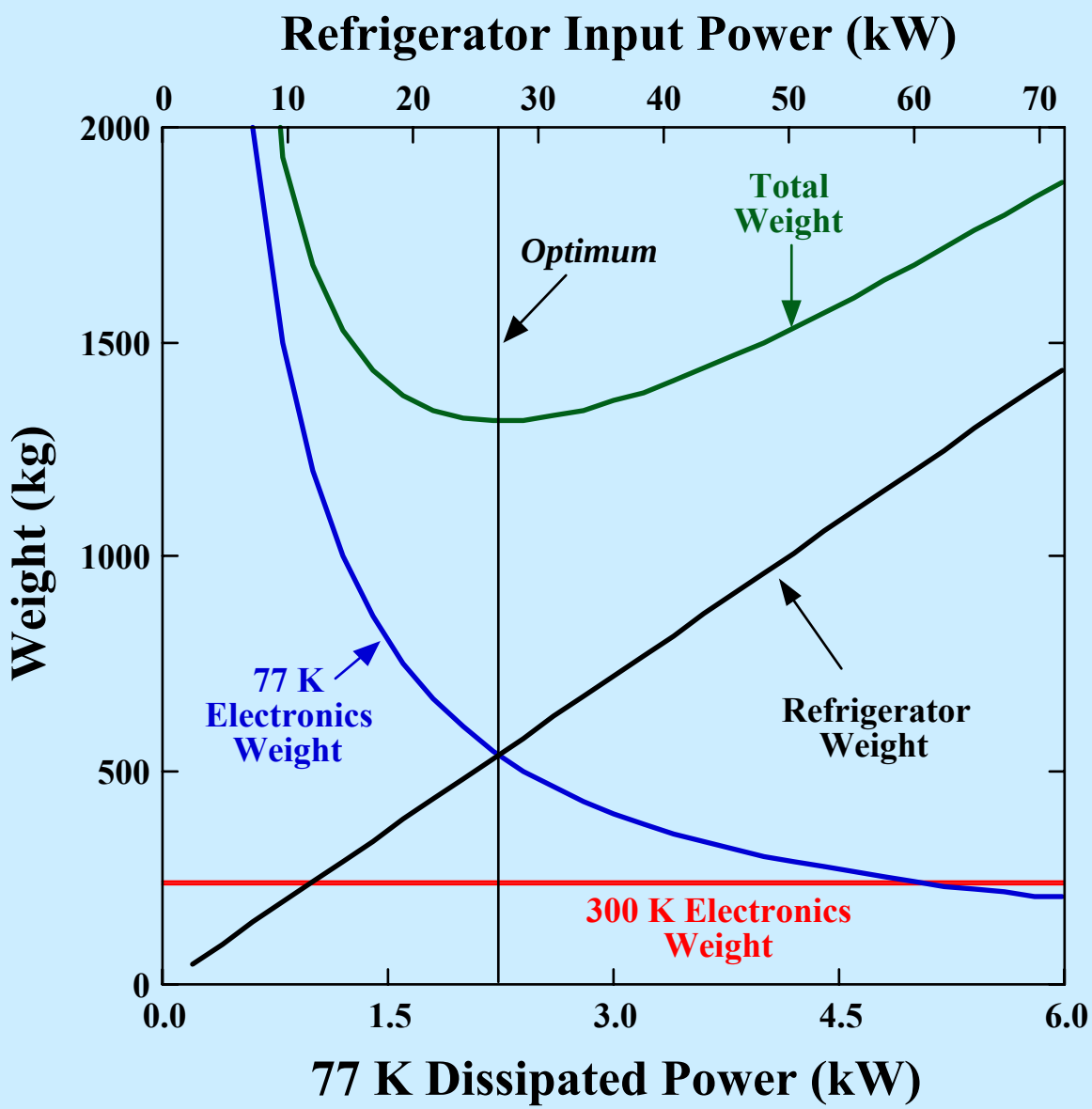
Refrigerator Input Power (kW)
0
10
20
30
40
50
60
70
2000
1500
1000
500
0
Weight (kg)
Total Weight
Optimum
77 K Electronics Weight
Refrigerator Weight
300 K Electronics Weight
0.0
1.5
3.0
4.5
6.0
77 K Dissipated Power (kW)

Passive Components

Cryo-Transformer

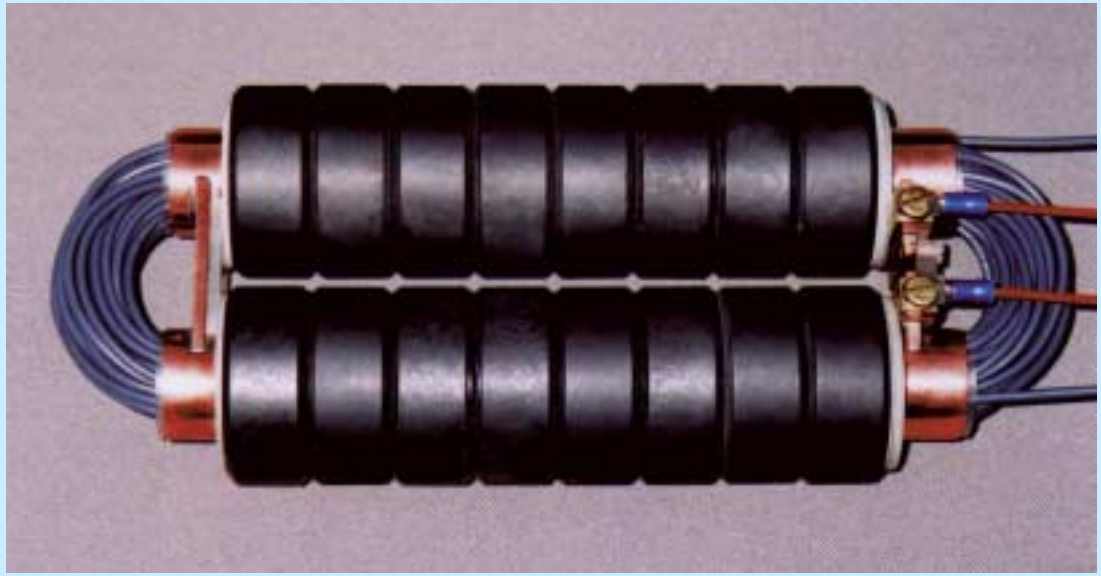

Cryo-Capacitor Comparison

	300 K Capacitors	*77 K Capacitors*	*Improvement @ 77 K*
Capacitance	10 mF	10 mF	---
Size	0.1 m^3	0.1 m^3	---
Weight	74 kg	74 kg	---
ESR (5 kHz)	36.5 μΩ	23.7 μΩ	1.5 times
Voltage	1000 V	2000 V	2 times
Energy Storage	5 kJ	20 kJ	4 times

Cryo-Capacitor: Equivalent Series Resistance

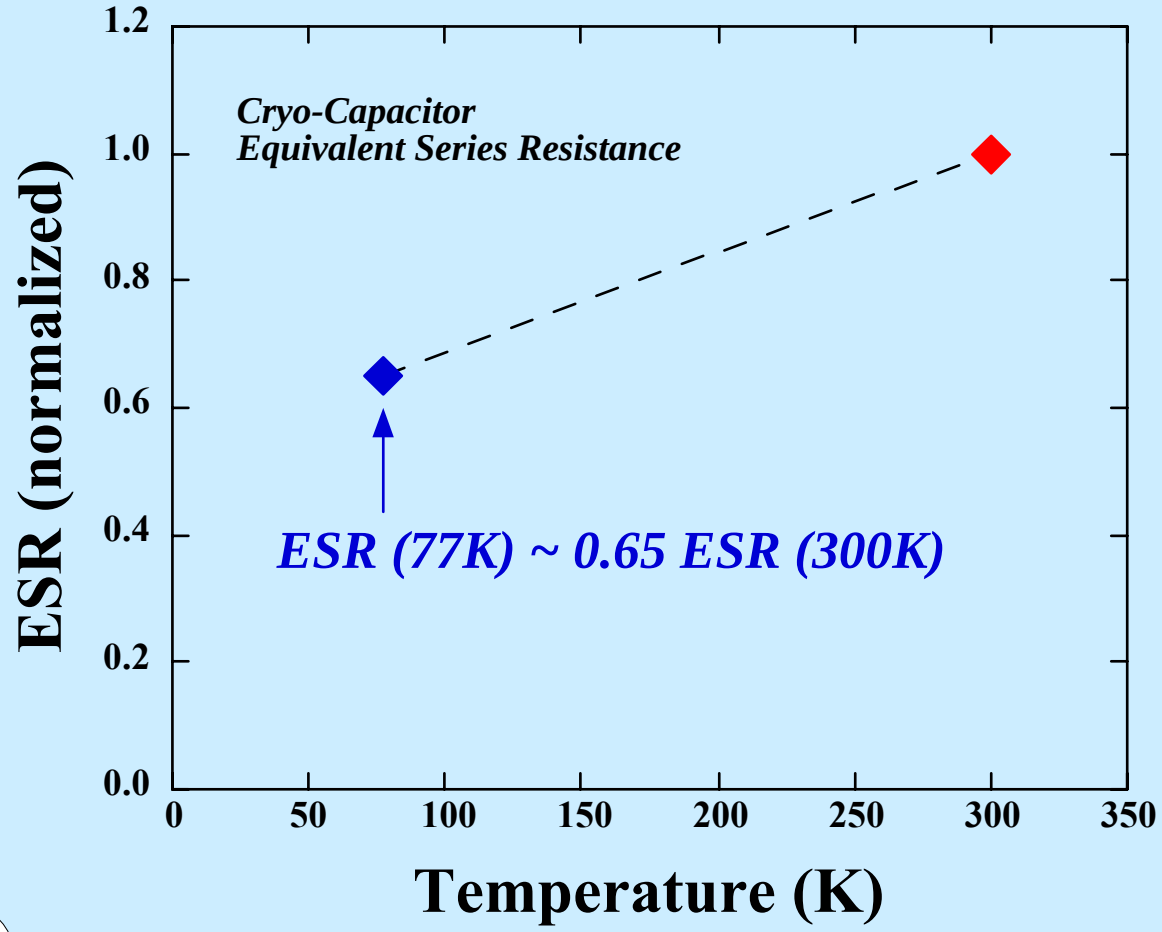

ESR Measurements

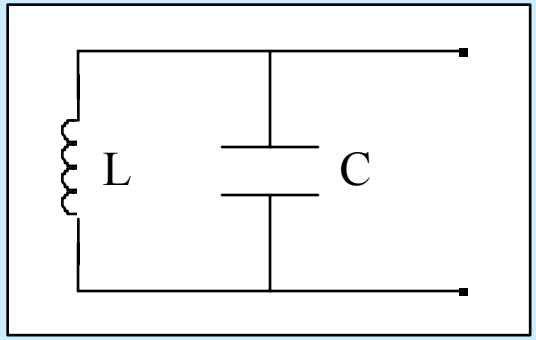

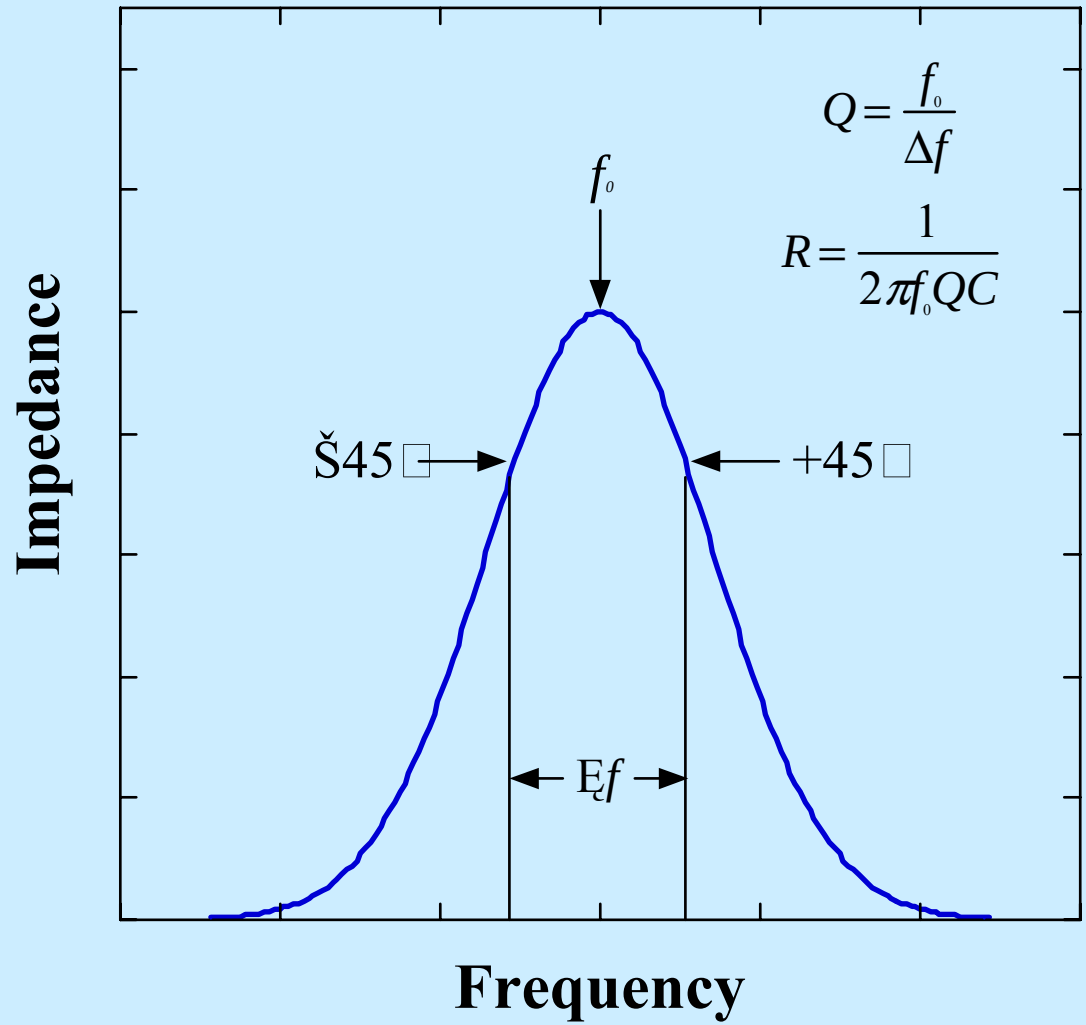

Cryo / MRI related

HTS RF COILS
FLUX TRAPS

2-D Current Noise in a Conductor

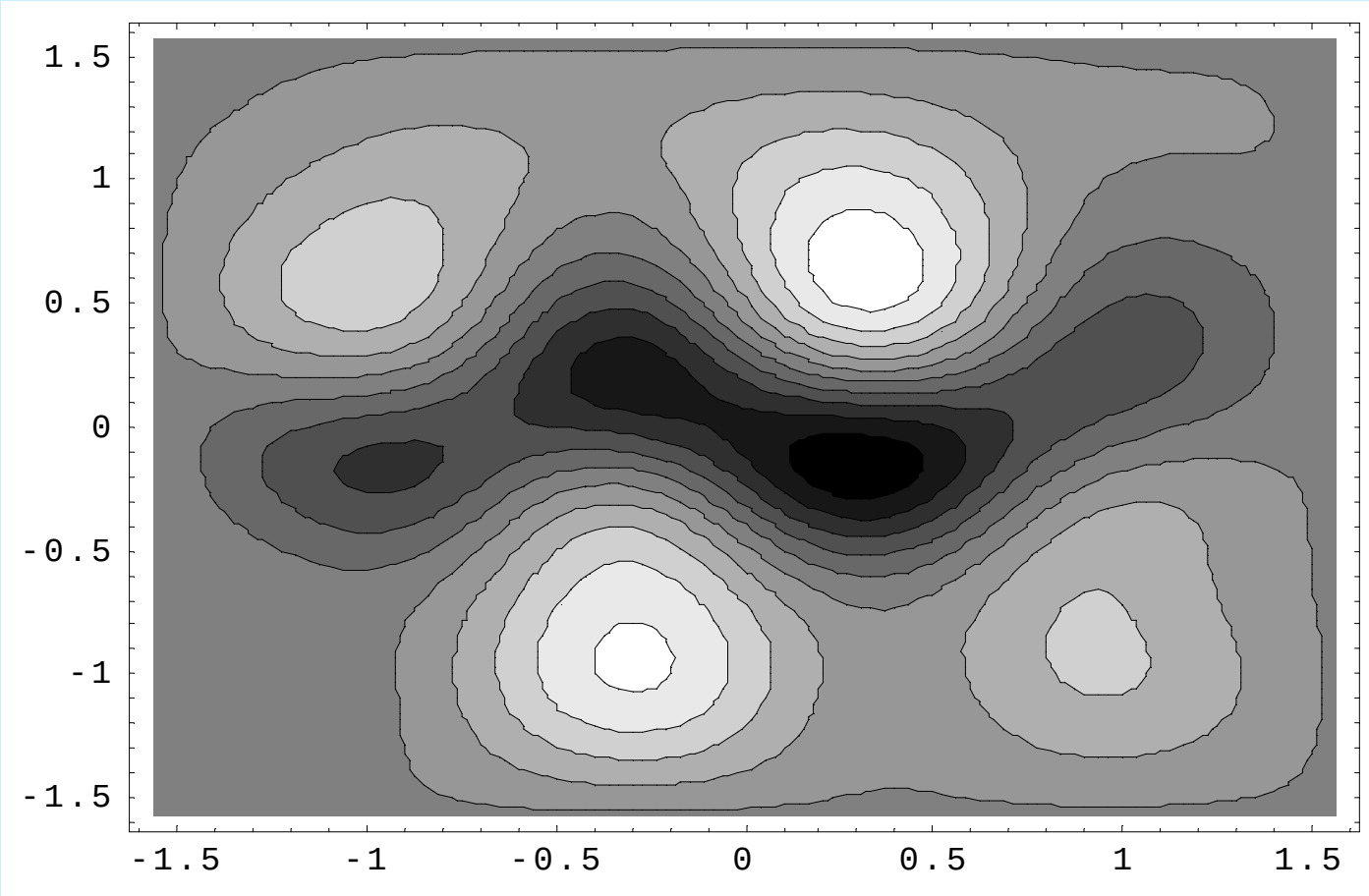

2-D Noise in a Conductor

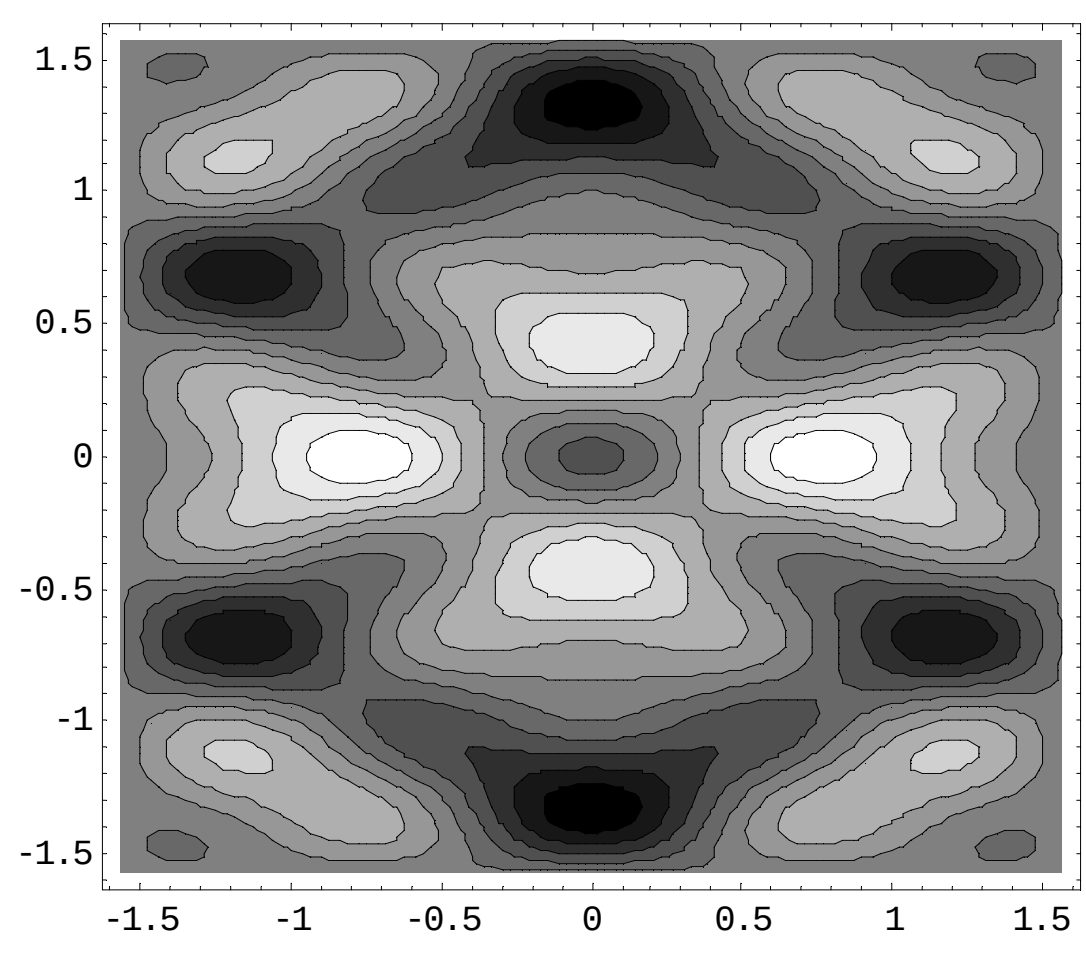

Derived from MRI:

Cryo-cooled Explosives Detector and…

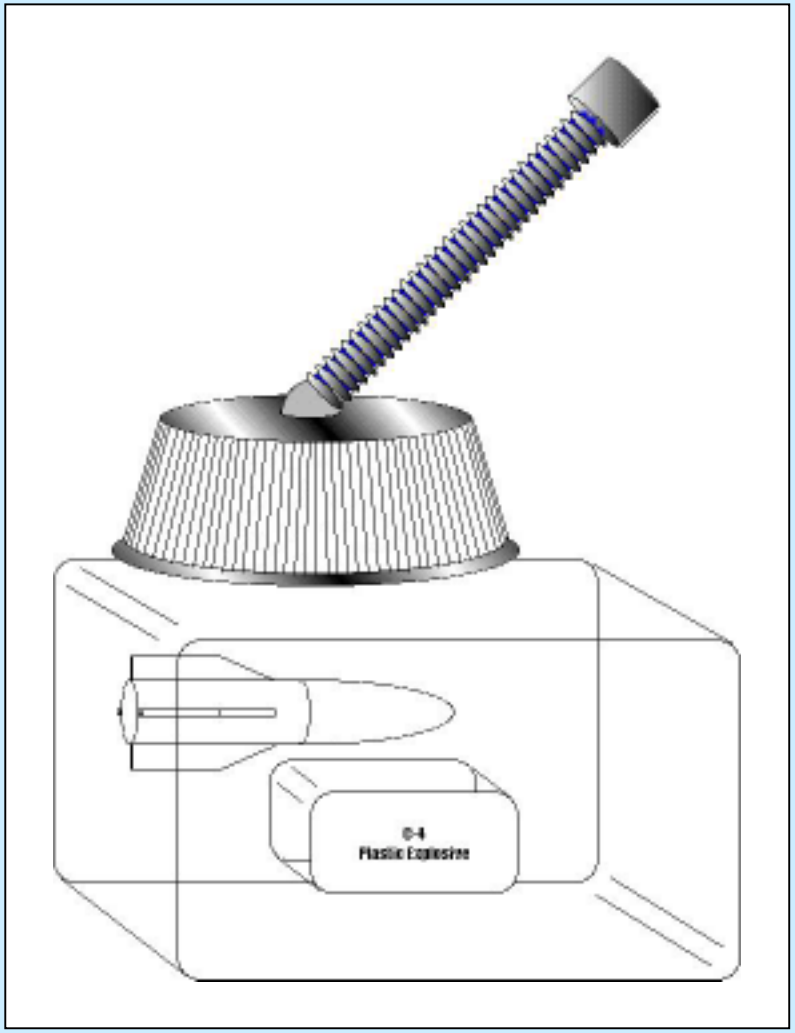

MTECH Laboratories

Earth Based Systems

Applications: The Cryo-Bus

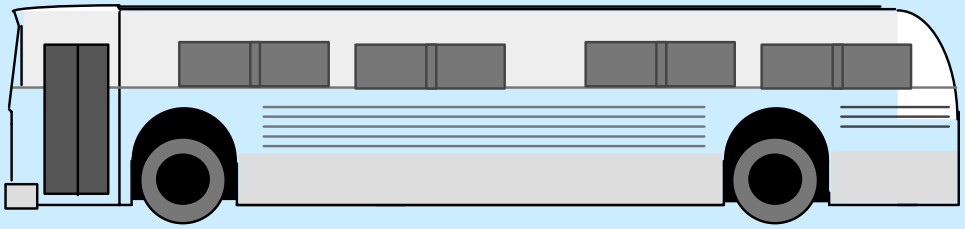

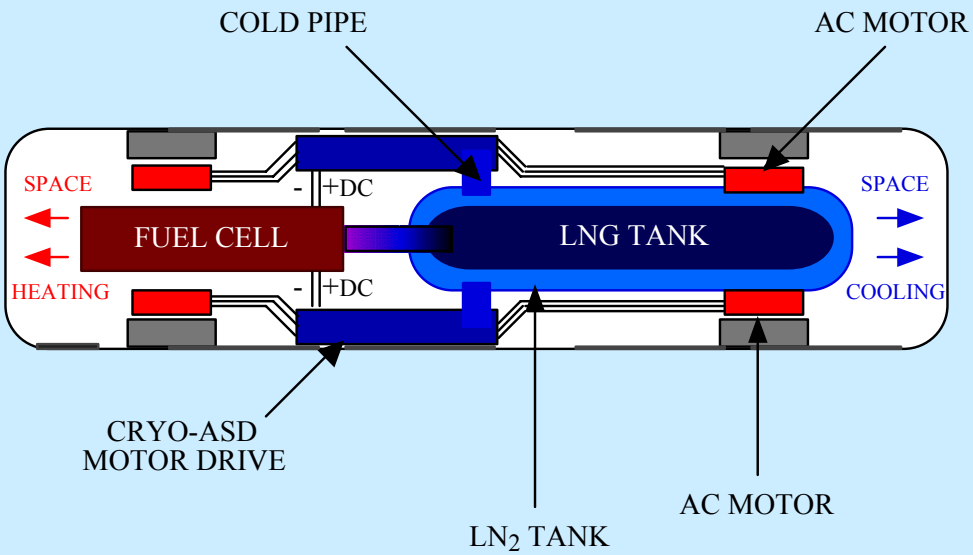

Cryo-Building

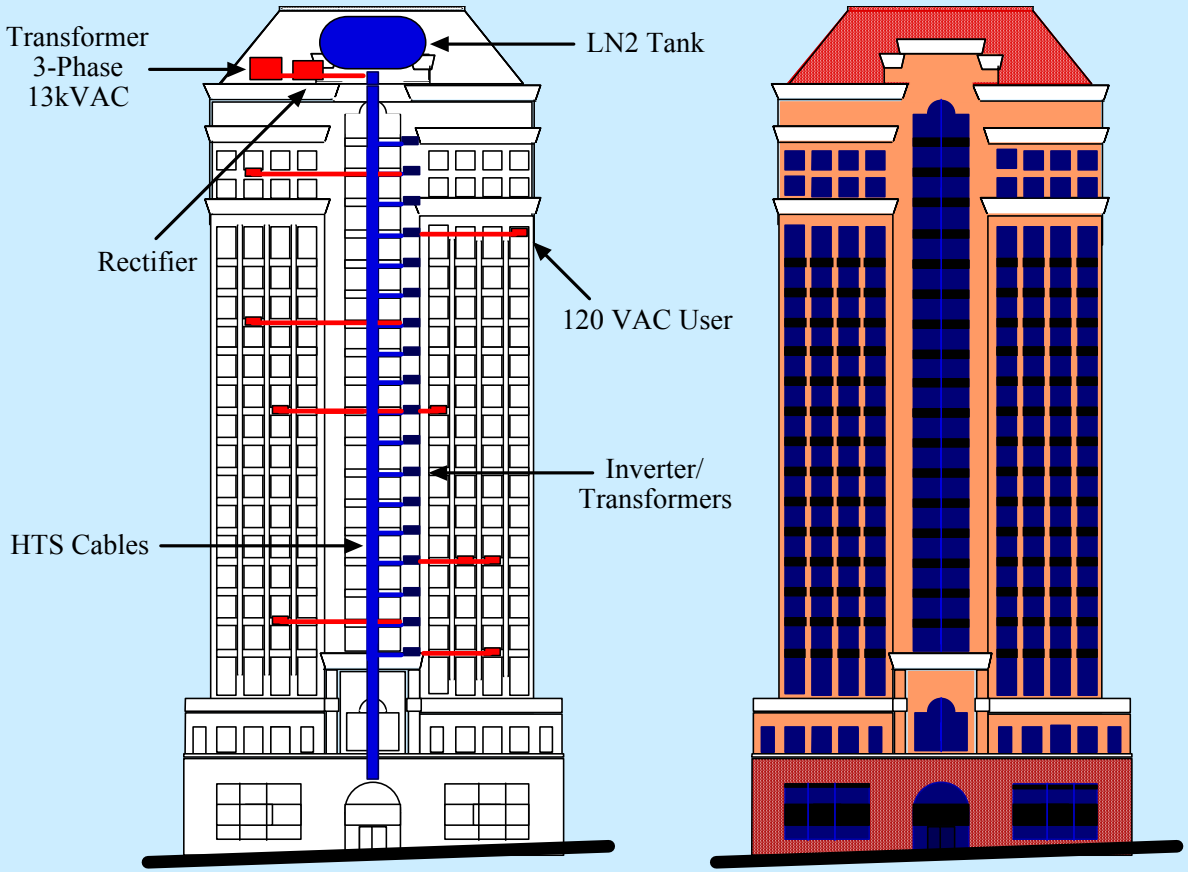

Applications: The Cryo-Ship

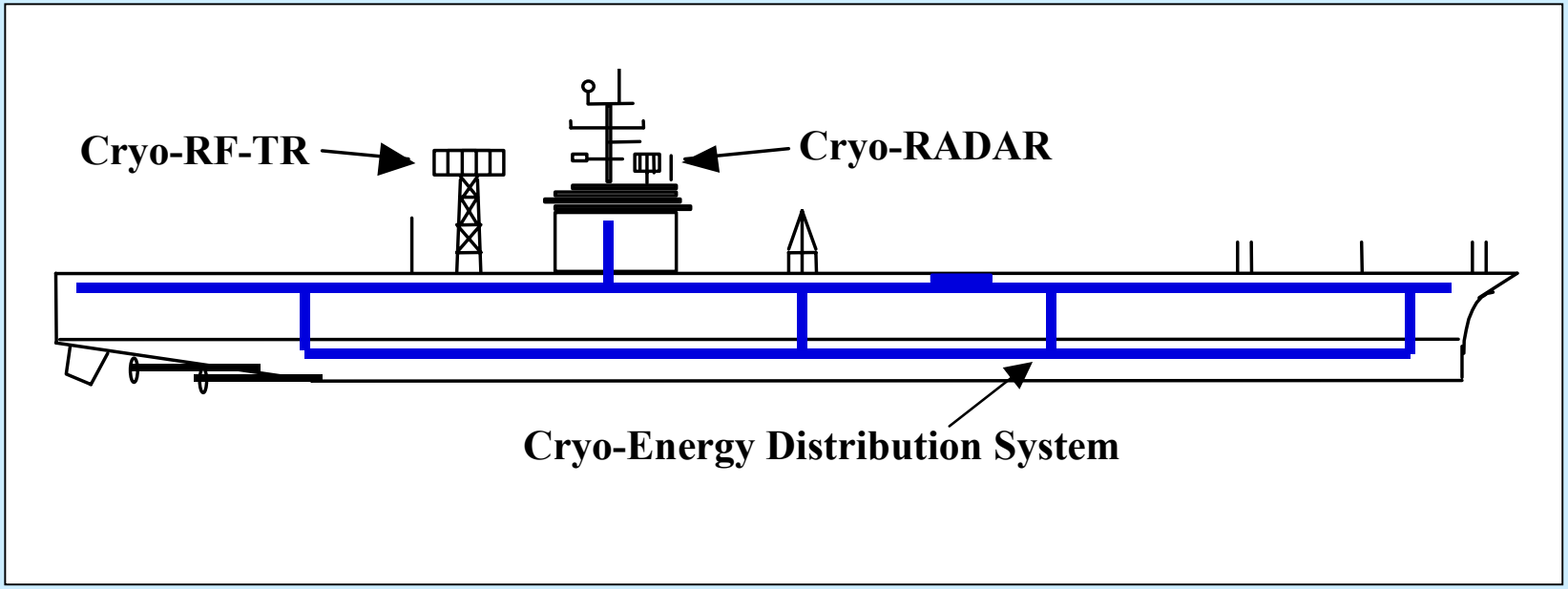

NASA Future Plans
"Cryogenic Missions"

1. Consider more integrated cryo-electronic systems for efficiency, performance and reliability.
2. Employ superconductors bulk and thin film (LTS or HTS)
3. Engage MRI related technologies